Real-Time Monitoring of Solar Battery Charging Station

Mirza Karishma Priyanka, Abrar Alvi Chowdhury, Bushra Mahmud, and Sheri Jahan Chowdhury, A. Azad
Department of Electrical and Electronic Engineering
BRAC University
Dhaka, Bangladesh

Abstract— **This paper represents a real-time monitoring technique of all the components of a Solar Battery Charging Station (SBCS). Its ability to generate clean energy at free of cost, along with availability almost all year round makes SBCS very popular in tropical countries like Bangladesh. Successful implementation of this technique in any existing SBCS can increase its efficiency and distribute more power to rural areas where National Grid is unavailable. The purpose of our project is to monitor every available aspect in any existing SBCS so that manual labor of any kind would not be required. In order to do so, we have created a new software for Windows operating system to monitor the battery voltages, SOC, approximate time remaining to become fully charged as well as each individual panel status and overall solar voltage and solar current, along with a manual backup system in case of low solar radiation. To take readings, we used a Data Acquisition (DAQ) Card and interfaced it with our software in a computer, so that we can take the most out of our available resources and give reliable readings in real time.**

Keywords- Real time, monitoring, manual backup, solar battery charging station, data acquisition

I. Introduction

The world today is moving forward at a fast pace thanks to modern science and technology. Unfortunately, almost every element of our technology depends directly or indirectly on fossil fuel, primarily petroleum [1], a source of power that we have been unable to find an alternative for. Worldwide reserve of fossil fuel is coming to an end [2], and considering its all-round negative impacts on the environment [3], finding an alternative source of energy has become a crying need for humanity. Renewable sources of energy, primarily solar energy has become popular all over the world as well as in Bangladesh [4], [5]. An astonishing figure of 15 million Bangladeshis are now directly or indirectly dependent on solar energy, with another 50,000 people joining the community every month [4]. Therefore, it can be said beyond doubt that Bangladesh has gone past the phase of just being introduced to solar energy. In fact, now we are looking forward to use solar energy in transportation [6], [7], solar home systems [8], solar water heater [9] and so on. As solar panels produce direct current (DC), the most widely used method to store this energy is by using lead acid batteries. Solar Battery Charging Stations (SBCS) can be very useful for charging batteries [10]. Not only can an SBCS provide free-of-cost charging to the batteries in an environment-friendly way, but it also charges faster than a Diesel Battery Charging Station (DBCS) [11]. Therefore, considering the fact that sunlight is not available for 24 hours in a day, and there may be natural occurrences for which we may not get proper solar radiation; the necessity of an effective system to monitor the status of a Solar Battery Charging Station in real time is beyond description.

Bangladesh, being a tropical country, is blessed with plenty of sunshine throughout the year, which can be up to 1700 kwh/m^2 everyday [12]. Therefore, at remote places in the country, where the national grid is not available and diesel generators are the only source of electricity, solar energy can be very effective to use, as it is free and produces no pollution. This energy can be stored in batteries and used for all kinds of purposes. Solar Battery Charging Stations can be set up to charge the batteries commercially.

The goal of our project is to monitor the charging status of the batteries in real-time in the SBCS. We have developed a software to not only show the voltage of the batteries, but also the State of Charge (SOC), time remaining to be fully charged and charge level (High, Medium or Low). To take the readings, we are using the Data Acquisition Card (DAQ Card). The data acquisition card is a major part in our project, we are providing monitoring system of the SBCS and through the DAQ we would be able to monitor all the reading effectively. It converts the entire analog signals coming from solar panels and charge controller into digital form for computer manipulation, thus enabling the software to display the values [13]. Moreover, we are also monitoring each individual panel and detect if there are any errors in one of them. Additionally, we have implemented a manual backup system where we can change the source of power to charge the batteries between the solar panel and the diesel generator to ensure that there is no interruption in charging the batteries. We have also implied an easy battery swapping technique.

The purpose of our project is to make a computer program to supervise an SBCS in real-time, to charge multiple batteries efficiently at a time with a manual backup system. Additionally, it helps to serve electrical vehicle through easy swapping technique.

II. HARDWARE IMPLEMENTATION OF OVERALL PROJECT

A. The Setup

The setup of our project is shown in Fig 1. The battery set gets charged from the solar panels through a charge controller. The solar panels that we are using for our project are two 200 watt panels along with another two 180 watt panels and are charging the batteries by combining them together making it a 760 Watt panel.

Every single of these mono-crystalline cell PV panels provide 24 volt nominal operating voltage. When we connect them in series they provide 48 volt nominal voltage, and then connected the other 2 panels similarly to form another 48 volt nominal voltage providing set of panels, and then connected these 2 sets in parallel in order to charge two sets of 48 volt battery through two 48 volt charge controllers.

A charge controller is a device that regulates the voltage and prevents damage due to overcharging [14]. We are using solar charge controller to preclude batteries from overcharging. Since our battery set is of 48 volt, our charge controller is also of 48 volt. The DAQ card is connected to the charge controller to measure the battery voltage. The computer takes the voltage readings through the DAQ card and it is shown in our newly created software (Fig 9).

For our research, we are using 12 volt 20 Ah sealed lead acid battery for the charging station. We connected four 12 volt batteries in series and made it a complete set of 48 volt 20 Ah battery. Fig 4 shows us the similarities between our batteries' readings compared to a reference SOC chart. Therefore, we have used this SOC chart as a reference to show the SOC of our batteries' states in our software

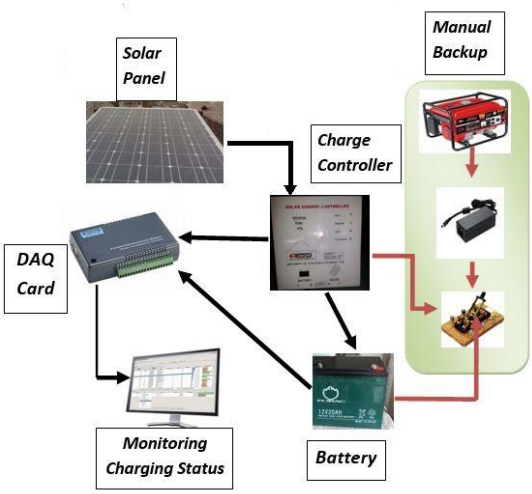

Fig 1: Overview of the Project

SET-1

Time	Solar Voltage	Solar Current	Battery Voltage
12:00 (initial)	68.9	2	48
12:30	66.1	2.4	49.7
1:05	66.9	3.8	50.2
1:35	67.1	1.9	50.5
2:07	66.2	1.7	50.6
2:36	67.3	2.1	50.9
3:06	67.2	2.1	50.9

Fig 2: Readings of Our Batteries

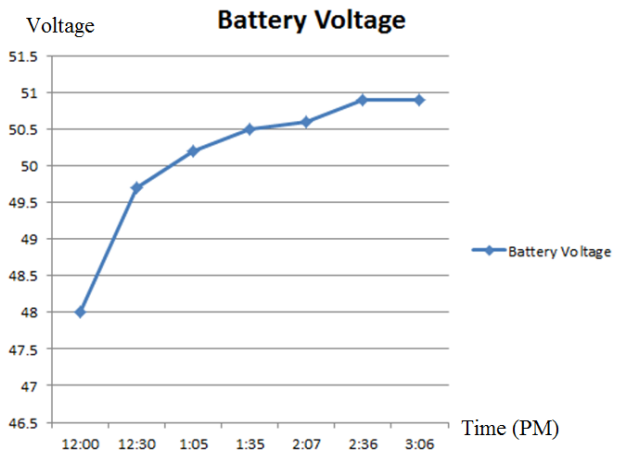

Fig 3: Charging Curve

Charge	12V Battery	48V Battery
100%	12.73	50.92
90%	12.62	50.48
80%	12.50	50
70%	12.37	49.48
60%	12.24	48.96
50%	12.10	48.40
40%	11.96	47.84
30%	11.81	47.24
20%	11.66	46.64
10%	11.50	46.04

Fig 4: Reference SOC Readings

B. Safety of DAQ Card

As the DAQ card retrieves the signal from the charge controller, which can be very high voltage, the safety of the DAQ card needs to be taken into consideration. The highest voltage that it can take is 15 volt [15]. Therefore, we have used, as shown in fig 5, the voltage divider rule to ensure its safety.

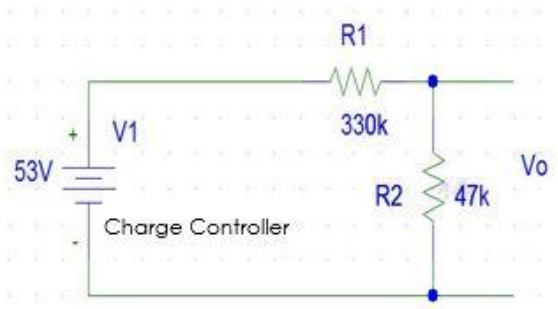

Fig 5: Voltage Divider Rule

We used a 47k and a 330k resistor in series, applied the charge controller's voltage across it, and took reading across the 47k resistor (Fig 5). To get the actual reading, we multiplied that voltage accordingly, and showed the accurate results in real time in our software.

C. Voltage Calculation

According to Voltage Divider Rule,

$V_0 = [R_2 \div (R_1 + R_2)] * V_t$

Here, R_1 = 330 kΩ and R_2 = 47 kΩ and

V_t = 53 volt (Assuming, where V_t is charge controller's voltage)

Therefore, output voltage, V_0 = 6.607 volt

This V_0 is fed into the DAQ.

All these readings are fed to the DAQ card's Analog Input pins. There are overall 16 analog input pins in DAQ card, of which one is used to measure total solar voltage, one for solar current, two for individual panels that we have used in our research and the rest 12 for battery readings.

D. Measuring Solar Voltage and Current

To measure the solar arrays' voltage and current, we used a similar voltage divider rule, with a 47kΩ and a 560kΩ resistor in series, as the solar voltage is quite higher than that of the charge controllers. The voltage across the 47 kΩ resistor is fed to the DAQ to ensure its safety and the resultant voltage is multiplied accordingly to get the accurate voltage reading of the solar voltage.

To measure the solar current, we connected a 1 Ohm power resistor in series with the PV array. The voltage drop across the resistor is equal to the current.

According to the ohm's Law, V=IR here, R=1ohm

So, V=I

To find out the voltage drop, we took two readings using two pins of the DAQ (Fig 6), and subtracted the voltage reading of point B from that of point A.

III.DEVELOPING THE SOFTWARE

To monitor the charging status of the batteries, we have developed our own software using simulation software. Our software consists of multiple Graphical User Interfaces (GUIs) which are programmed for different purposes. The main GUI, as shown in fig 7, has a "**Show Solar Status**" button, which shows solar arrays voltage and current. There are also buttons which open up new GUI's to show the solar panel's status, a select device button which ensures that the correct DAQ device is selected in case more than one DAQ card is connected to the PC, and most importantly, a button to show the condition of the battery sets.

When the "**Show The Batteries**" button is clicked, a new GUI, shown in fig 8, opens up which has a button for each of the individual battery sets (battery sets 1 to 12), along with its SOC and approximate time remaining for under that battery's selection button.

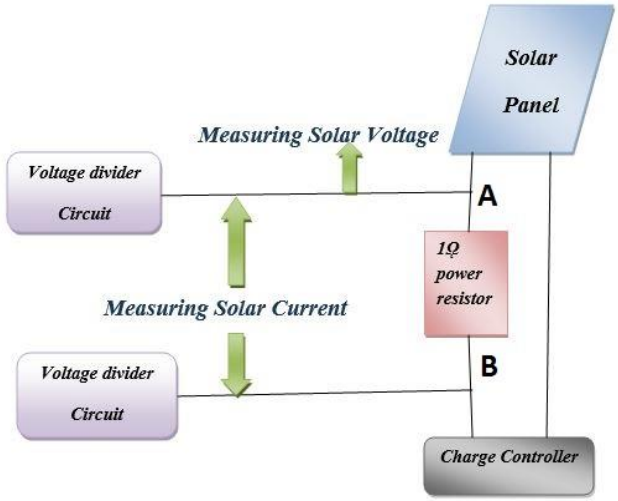

Fig 6: Measuring Solar Voltage and Current

Fig 7: Primary GUI of our software

Fig 8: Battery Set Selection GUI (for sets 1 to 12)

We have used USB-4716 DAQ card that has analog and digital input and output system [13]. When an individual battery set is selected, a new GUI opens up (Fig 9), that shows that individual battery set's voltage, SOC, approximate time remaining, SOC level (marked as "High", "Medium" and "Low"), and a textbox that only pops up a warning if the battery set is damaged or disconnected, or if the battery is fully charged.

Our primary GUI has two textboxes which states "**Manual Backup Recommended**" when the solar current is less and switching to manual backup would be more efficient in charging the batteries, and another textbox which states "**Error! Check Panel Status**" when there is any error in any of the panels. When the "Panel Status" button is pressed, it opens up another GUI (Fig 10), which shows the individual panel voltages, along with a comment box, which states if the panels are working correctly or not.

We have used the logic that if any panel's voltage is 15% less than the other one, then the panel with the lower voltage has some kind of error. Possible reasons for error could be disconnection or any kind of shade or obstacle on the panel.

It is very important to notice that the software can be used even if multiple DAQ cards are connected to a single PC. Therefore, before taking any reading, it is essential to select the correct device in every individual GUI.

IV. Interfacing

Interfacing between the setup and the computer is the most important part in our project. First and foremost, the DAQ driver needs to be installed in order for the computer to communicate with the device. Next, in the code of the program, we used several built-in functions to choose the correct pins of the DAQ Card and send appropriate command to them to perform specific operations according to our needs. Some of the functions are described below.

- We renamed the Analog Input Control and Analog Output Control functions as DemoAI and DemoAO accordingly
- DemoAI.DataAnalog()- To retrieve analog signals from Analog Inputs.

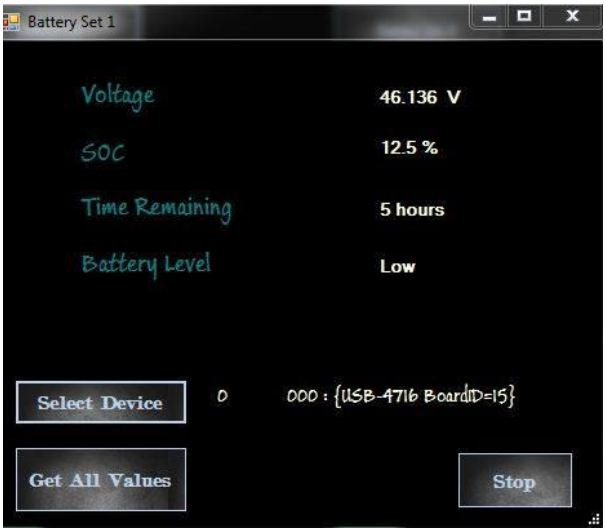

Fig 9: GUI of Individual Battery Set Readings

Fig 10: Solar Panel Status Observation GUI

- DemoAO.DataPhysics()- To send an analog voltage output to the Analog Output pins
- SelectDevice()- To select the correct device for the correct execution of data
- DeviceName() and DeviceNumber()- To show the name of the device and its corresponding number.

V. MANUAL BACKUP

The use of solar charging Batteries are not only limited to any vehicle like rickshaw or auto rickshaw. A developing country like Bangladesh is not yet fully able to provide electricity all over the country. Many places are still out of national grid's electrical facility [4]. So, these batteries can be used as an alternative source of power for off grid areas. A generator of same power, compared to solar panel we are using, can take place as a backup source.

A generator generates AC current. However, through a 48 volt adapter we can make it DC to charge 48 volt batteries. A

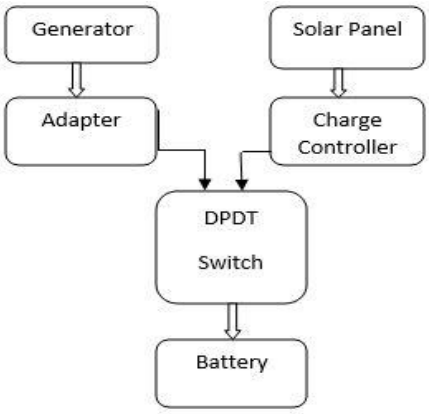

Fig 11: Manual Backup

Double-pole-double-throw (DPDT) switch is used to determine which one we want to use, solar panels or generator as the power source (Fig 11).

The positive and negative sides of both adapter and charge controller are connected to the opposite poles and the battery should be connected with the middle pole of the DPDT switch. The throw can be changed to switch the sources

We have considered manual backup instead of automated switching as this project is designed for off grid areas. In that case, we do not need to charge all the time, but when we need in critical or no solar condition we can manually control it and take power from generator. Our software also shows if we do not get appropriate sunlight to charge the battery efficiently.

VI. BATTERY SWAPPING TECHNIQUE

The batteries we are using is quite heavy to carry it to the station and also the other way around. Moreover we connected four 12 volt 20 Ah batteries in series to make 48 volt 20 Ah battery set; therefore apparently it would require strong muscle power to lift them up. Hence we have used a useful swapping technique for our charging station to move these heavy sets of batteries along effortlessly. First of all we have built a roller system using chain, bearing, wheel and belt (Fig 12). The roller structure is 20 inch in length and 8 inch in width. Chains are attached to the bearing and bearings can move along the trolley. We have place a belt above the chains to make a platform where the batteries will be positioned and the wheel attached can rotate both in right-handed and left-handed direction so that when we rotate it the batteries can simply slide to the platform both inwards and outwards direction. The whole roller system is placed on the trolley. The four stands of the trolley is also attached with one another by wielded iron rod so that it can sustenance the loads of the batteries and likewise the stands becomes firm this way. The trolley is 20.5 inch in height and it would be 30 inch having the batteries placed on the podium. The four stands have wheels underneath them and can move along on the surface.

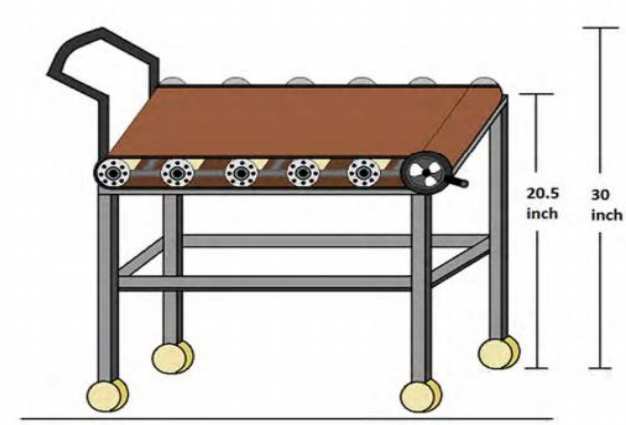

Fig 12: The Roller System Based Adjustable Trolley

VII. FULL PROJECT AT A GLANCE

Fig 13 shows the full project at a glance.

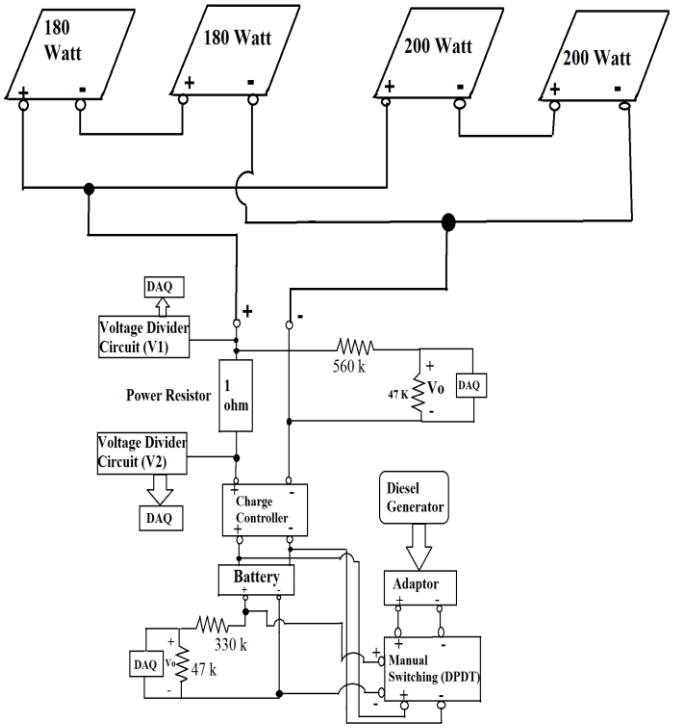

Fig 13: Full Project at a Glance

VIII. ADVANTAGES OF THIS PROJECT

The advantages of our project:

- All the status and measuring can be done in real time.
- Detection of any problem without any difficulty.
- Easily determine when manual backup is needed.
- Status of multiple battery sets can be shown through one channel at a time along with the battery.
- Solar status can be acknowledged.
- Helpful for off-grid area.

IX. FUTURE WORKS

- Implement multiplexing technique to use a single channel to monitor multiple battery sets.
- Expand SBCS to monitor more battery and panel using minimum number of channel. With the help of a 2-to-1, we have done 2 sets of batteries using one channel; similarly multiple panels can be monitored in the same procedure.
- Various types of sensor like smoke sensor, fire sensor can be installed in the software along with the alert system. This type of sensor will enhance the safety of SBCS.
- We can install the sun tracker system to the solar panel to get the maximum efficiency.

CONCLUSION

Solar energy is becoming increasingly one of the most widely used alternative sources of energy, therefore, real-time monitoring of SBCS is very important, not only for the observation of the batteries, but also for the panels and the overall system. Successful use of this software will ensure no power is wasted and increase the efficiency of any SBCS.

ACKNOWLEDGEMENT

This project is our final year thesis project, funded by BRAC University. We would like to thank Control and Application Research Center (CARC) for its contribution.

REFERENCES

[1] Economist, “The end of the Oil Age,” *The Economist*, 23-October-2003.

[2] The Guardian, “The end of oil is closer thank you think”, 21-April-2005

[3] B. Pieprzyk, N. Kortluke, P.R. Hilje (2009), “The impact of fossil fuels”, report published for Energy Research Architeure (ERA).

[4] Reuters, “Bangladesh aims to be world’s 'first solar nation'”, 25-January-2015

[5] Chhunn Chhim, Nipon Ketjoy, and Tawat Suriwong, “Techno-Economic Analysis of PV Battery Charging Station in Kampot, Cambodia”, Journal of Clean Energy Technologies, Vol. 2, No. 4, October 2014

[6] AKM Abdul Malek Azad, "The Solar Assisted Rickshaw Van: A Complete Off-Grid Solution" published in IEEE Transportation Electrification newsletter, January/February 2015, USA

[7] Rachaen M. Huq, Md. Anamul Hoque, Partha Chakraborty, Numayer T. Shuvo, and A.K.M. Azad, “Development of Torque Sensor Based Electrically Assisted Hybrid Rickshaw”, published in 2012 Sixth International Conference on Sensing Technology, Kolkata, India

[8] Hossain, E. Mohith and A. Azad, "Solar Home Systems in Bangladesh - A case study in Gazipur, Kapasia" Proceedings of International Conference of Renewable Energy: Generation and Application 2010, Al-Ain, UAE, March 8-10

[9] S. Sadrin, M. Hossain, E. Mohith and A. Azad, "Alternative Solar Water Heater for Domestic Purpose" Proceedings of International Conference of Renewable Energy: Generation and Application 2010, Al-Ain, UAE, March 8-10, 2010

[10] Chowdhury, F.; Shabnam, F.; Islam, F. and Azad, A., "Software implementation of the Central Solar Battery Charging Station (CSBCS)," Power, Energy and Control (ICPEC), 2013 International Conference on , vol., no., pp.746,750, 6-8 Feb. 2013, India.

[11] Internet. http://bdoza.wordpress.com/2009/05/11/solar-energy-alternative-source-of-energy-forbangladesh/

[12] Khan, S.H., Rahman, T., Hossain, S.; “A BRIEF STUDY OF THE PROSPECT OF SOLAR ENERGY IN GENERATION OF ELECTRICITY IN BANGLADESH”, published in Cyber Journals: Multidisciplinary Journals in Science and Technology, Journal of Selected Areas in Renewable and Sustainable Energy (JRSE), June Edition, 2012

[13] Advantech. “Active DAQ pro user guide.”

[14] Omaer Ahmed, Syed Md. Musa Sunny, Wasefa Ferdous, Thesis on “Hardware Implementation of the Central Solar Cattery Charging Station (CSBCS)”, BRAC University.

[15]. Advantech USB-4716 Datasheet.